CONTRACTOR LIGHTING & SUPPLY
WWW.CONTRACTORLIGHTING.COM

PROJECT
TYPE
CATALOG #

10-PNLASR24

2X4 BACK-LIT ARCHITECTURAL DROP-IN

HOUSING
- White powder-coat, steel housing.

ELECTRICAL
- High ambient operating temperature up to 45°C.
- Universal 120-277V AC voltage (50-60Hz).
- IC Rated.
- 0-10VDC dimming driver.
- Input transient surge protection =1kV.
- Optional Emergency drivers are available.
- Power Factor > 0.9.
- Total Harmonic Distortion < 20%.

OPTICAL SYSTEM
- Efficacy 151 LPW.
- Field selectable 2700K, 3000K, 3500K, 4000K, and 5000K color temperatures. *
- Selectable output delivers from 3,051 to 5,898 nominal lumens, with 4 settings.
- Long-life LEDs provide 180,000 hours of operation with at least 70% of initial lumen output (L70), and 54,000 hours with at least 90% of initial lumen output (L90).**
- Sensor-ready receptacle comes standard. Push-in sensor and remote control sold separately.
- LED color maintenance <0.0007 chromaticity shift (Δu'v') over the initial 6,000 hours of operation.
- PMMA (Polymethyl methacrylate) LED lenses for optimal light distribution, efficiency and longevity.
- Color Rendering Index > 80.

MOUNTING
- Recessed mounting in grid ceilings is standard.
- Optional Surface Mounting Kits (10-SMKT-24S) and Flange Mounting Kits (10-FLANGEKIT24-ET) provide for installation on plaster or other hard ceilings.
- Optional Cable Mounting Kits (10-PNL-CM) provide additional security, as well as suspended mounting.

CODE COMPLIANCE
- cULus listed for damp locations and insulated ceilings.
- Complies with FCC Part 15, Class A.
- IP4X rated for ingress protection.

WARRANTY
- 5-year warranty on all electronics and housing.

*Factory set to 4000K CCT, and highest power output.
**L70 and L90 hours are IES TM-21-11 calculated hours.

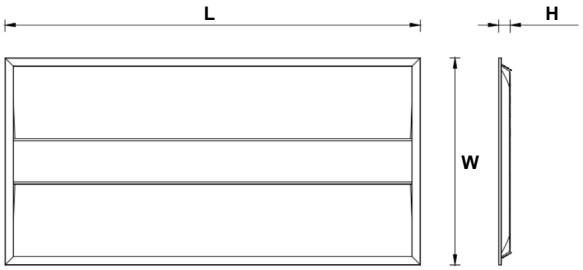

Model	Size (inches) & Weight (lbs)			
	L (in)	W (in)	H (in)	Weight
10-PNLASR24-6543L-5CCT	47.76	23.74	1.34	9.86

PRODUCT PARAMETERS

SERIES	NOMINAL LUMEN OUTPUT (SELECTABLE)	KELVIN (SELECTABLE)	EMERGENCY DRIVER
10-PNLASR24	6543L = 6,000 / 5,000 / 4,000 / 3,000 Lumens	5CCT = 2700K/3000K/3500K/4000K/5000K	EM5 = 5W Emergency Driver EM10 = 10W Emergency Driver EM13 = 13W Emergency Driver

CONTRACTOR LIGHTING & SUPPLY
WWW.CONTRACTORLIGHTING.COM

PROJECT
TYPE
CATALOG #

10-PNLASR24

2X4 BACK-LIT ARCHITECTURAL DROP-IN

ACCESSORIES (order separately)

Sensor:

22-HD08VR-P-1	=	Panel passive infrared sensor, 0-10V step dim, daylight threshold, max mounting height = 14FT
22-HD08VR-M-1	=	Panel microwave occupancy sensor, 0-10V step dim, daylight threshold, max mounting height = 13FT
22-ANT-1P-5T-BLE-GE	=	BlueZone™ Bluetooth® PANEL PIR sensor, 120-277V, 0-10V step dim, daylight threshold, max mounting height = 39 FT
22-ANT-1M-5T-BLE-GE	=	BlueZone™ Bluetooth® PANEL microwave occupancy sensor, 120-277V, 0-10V step dim, daylight threshold, max mounting height = 49FT

Factory settings for Sensor : detection area =100%, hold time = 5 sec, stand-by period = 0 sec, stand by dimming level = 10%, daylight threshold = disabled, RCA

Mounting Option:

10-FLANGEKIT24-ET	=	2X4 Flange Mount Kit for Panels & Center Baskets
10-SMKT-24S	=	2X4 Surface Mount Kit For Panels & Center Baskets
10-PNL-CM	=	Cable Mount Kits

Remote Mount EM Drivers:

BLEM-CP-5C	=	5W Emergency Driver W/Conduit and Test Button
BLEM-CP-10C	=	10W Emergency Driver W/Conduit and Test Button
BLEM-CP-13C	=	13W Emergency Driver W/Conduit and Test Button

COMPATIBLE EMERGENCY DRIVERS - INSTALLED

Emergency Driver Part Number	EM5		EM10		EM13	
Model	**Watts**	**EM Lumens**	**Watts**	**EM Lumens**	**Watts**	**EM Lumens**
10-PNLASR24-6543L-5CCT	5	697	10	1395	13	1814

COMPATIBLE DIMMERS & CONTROLS

Manufacturer	Model Number	Dimmer Range	Load Switching Capacity
Best Lighting	DWS-010V-T	10%-100%	600W
Best Lighting	DWS-010V-D	10%-100%	600W
Leviton	IP710-LFZ	10%-100%	1200W
Lutron	DVSTV	10%-100%	450W

CONTRACTOR LIGHTING & SUPPLY
WWW.CONTRACTORLIGHTING.COM

PROJECT
TYPE
CATALOG #

10-PNLASR24

2X4 BACK-LIT ARCHITECTURAL DROP-IN

ELECTRICAL DATA & LUMEN TABLES

Series	Measure-ments		6L					5L				
			2700K	3000K	3500K	4000K	5000K	2700K	3000K	3500K	4000K	5000K
10-PNLASR24-6543L-5CCT	Lumens		5,662	5,841	5,965	5,969	5,937	4,806	4,911	5,005	5,027	5,011
	Watts		41.88	41.69	41.12	41.57	42.01	34.69	34.39	33.99	34.31	34.67
	Efficacy		135.20	140.11	145.06	143.59	141.32	138.54	142.80	147.25	146.52	144.53
	Input Current (A)	120V	0.35	0.35	0.34	0.35	0.35	0.29	0.29	0.28	0.29	0.29
		240V	0.17	0.17	0.17	0.17	0.18	0.14	0.14	0.14	0.14	0.14
		277V	0.15	0.15	0.15	0.15	0.15	0.13	0.12	0.12	0.12	0.13

Series	Measure-ments		4L					3L				
			2700K	3000K	3500K	4000K	5000K	2700K	3000K	3500K	4000K	5000K
10-PNLASR24-6543L-5CCT	Lumens		3,937	4,016	4,081	4,102	4,098	3,051	3,103	3,148	3,167	3,171
	Watts		27.78	27.58	27.29	27.53	27.73	21.09	20.97	20.81	20.93	21.05
	Efficacy		141.72	145.61	149.54	149.00	147.78	144.67	147.97	151.27	151.31	150.64
	Input Current (A)	120V	0.23	0.23	0.23	0.23	0.23	0.18	0.17	0.17	0.17	0.18
		240V	0.12	0.11	0.11	0.11	0.12	0.09	0.09	0.09	0.09	0.09
		277V	0.10	0.10	0.10	0.10	0.10	0.08	0.08	0.08	0.08	0.08

PHOTOMETRIC DATA

10-PNLASR24-6543L-5CCT

Luminaire Data

Description	2X4 Architectural Panel Lumen & Kelvin Select
Total Lumens	5,898
Input Wattage	41
Efficacy (lm/W)	143
Spacing Criterion (0-180°)	1.26
Spacing Criterion (90-270°)	1.32

Photometrics calculated at 4000k-high lumens setting

Zonal Lumen Summary

Zone	Lumens	%Fixt
0-20°	714	12.1%
0-30°	1,526	25.9%
0-40°	2,521	42.8%
20-50°	2,862	48.5%
40-70°	2,792	47.3%
0-60°	4,552	77.2%
0-80°	5,765	97.8%
0-90°	5,892	99.9%
90-180°	6	0.1%
0-180°	5,898	100.0%

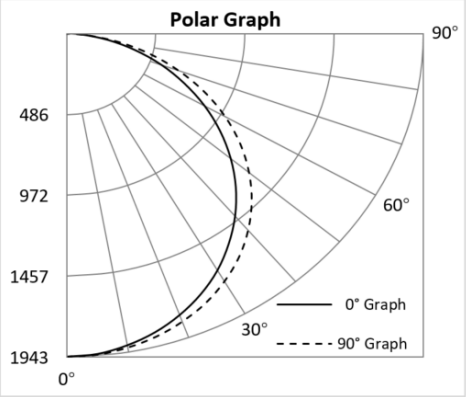

PROJECT
TYPE
CATALOG #

10-PNLASR24

2X4 BACK-LIT ARCHITECTURAL DROP-IN

BRANCH WIRING OPTIONS

When ordering a cord and plug, use the following suffix choices.
Example: 10-PNLASR24-6543L-5CCT-6W3
Note: Cords & plugs do not affect the ability to install sensors.

Part number suffix	Description	For use with
6W3	6’ whip - 3 conductor (black/white/green)	Standard
6W4	6’ whip - 4 conductor (black/white/green/red)	EM driver
6W5	6’ whip - 5 conductor (black/white/green/purple/pink)	Dimming (standard)
6W6	6’ whip - 6 conductor (black/white/green/red/purple/pink)	Dimming & EM driver

DIMENSIONAL DRAWINGS

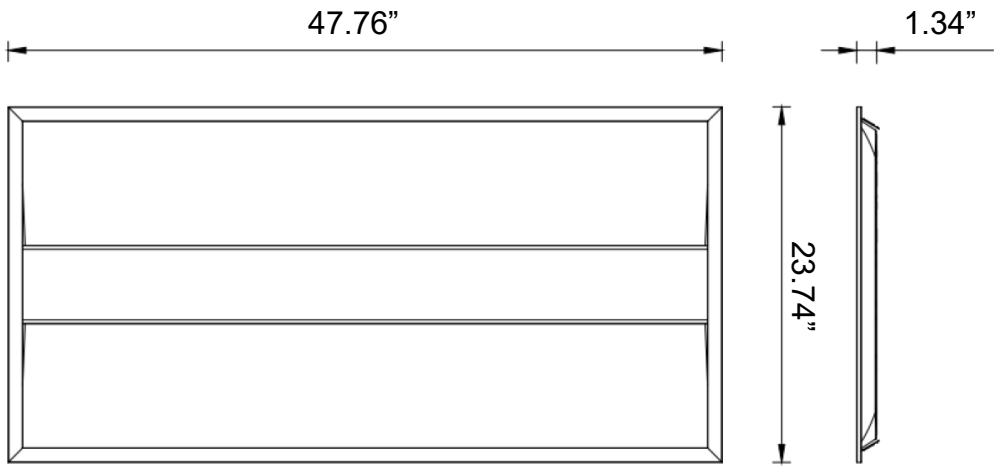

CONTRACTOR LIGHTING & SUPPLY
WWW.CONTRACTORLIGHTING.COM

PROJECT
TYPE
CATALOG #

10-PNLASR24

2X4 BACK-LIT ARCHITECTURAL DROP-IN

MOUNTING MEANS-ORDER SEPARATELY

- Optional surface mounting kit (10-SMKT-24S) mounts below the ceiling.
- Optional flange mounting kits provide recessed installation on plaster or other hard ceilings. Attach the flange mount kit (10-FLANGEKIT24-ET) to ceiling joists or other stationary structures, and the panel is mounted flush to the ceiling.
- Optional cable mounting kits provide additional security, as well as suspended mounting. Attach one end of the cable mount kit (10-PNL-CM) to luminaire earthquake clips using spring clips, and attach the other end to stationary structures using the adjustable, locking ceiling attachment (see picture at the lower right).

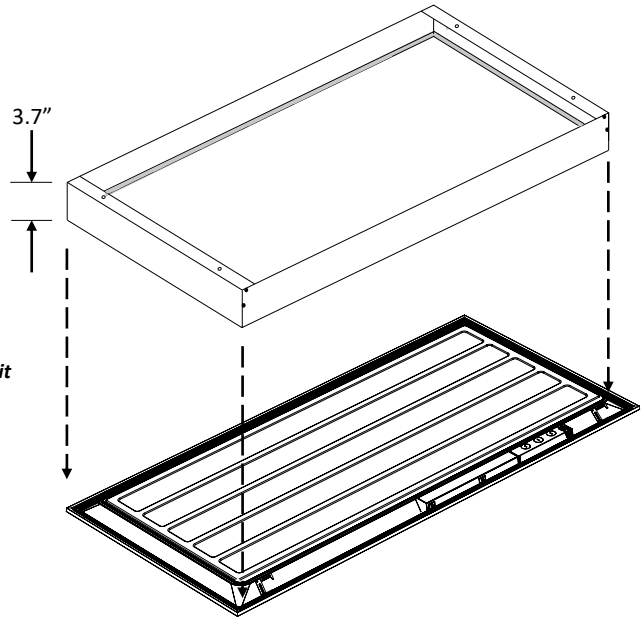

Surface Mounting Kit (10-SMKT-24S)

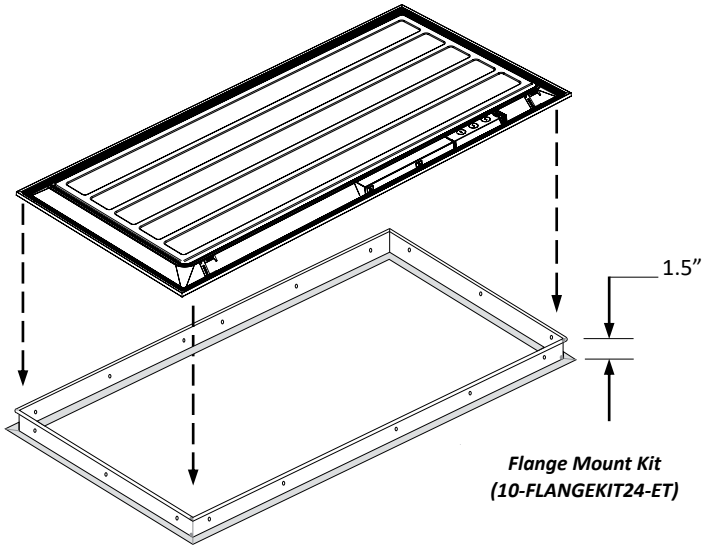

Flange Mount Kit (10-FLANGEKIT24-ET)

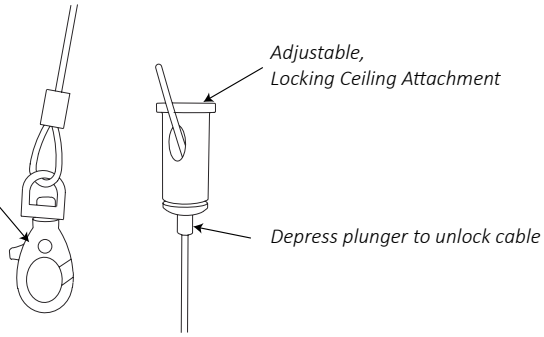

Cable Mount Kit (10-PNL-CM)